Installation Leaflet **IL042004EN**

Effective December 2016
Supersedes October 2016

C445UM Monitoring User Interface Installation Leaflet

Instruction Leaflet
Montageanweisung
Notice d'installation
Instrucciones de montaje
Istruzioni per il montaggio
安装说明
Инструкция по монтажу
Montageh andleiding
Montagev ejledning
Οδηγίες εγκατάστασης
Instruções de Montagem
Monteringsanvisning
Asennusohje
Návod k montáži
Paigaldusjuhend
Szerelési utas
Montāžas instrukcija
Montavimo instrukcija
Instrukcja montażu
Navodila za montažo
Návod na montáž
Монтажни инструкции
Instrucţiuni de montaj

(en) **Electric current! Danger to life!**
Only skilled or instructed persons may carry out the following operations.

(de) **Lebensgefahr durch elektrischen Strom!**
Nur Elektrofachkräfte und elektrotechnisch unterwiesene Personen dürfen die im Folgenden beschriebenen Arbeiten ausführen.

(fr) **Tension électrique dangereuse !**
Seules les personnes qualifiées et averties doivent exécuter les travaux ci-après.

(es) **¡Corriente eléctrica! ¡Peligro de muerte!**
El trabajo a continuación descrito debe ser realizado por personas cualificadas y advertidas.

(it) **Tensione elettrica: Pericolo di morte!**
Solo persone abilitate e qualificate possono eseguire le operazioni di seguito riportate.

(zh) **触电危险！**
只允许专业人员和受过专业训练的人员进行下列工作。

(ru) **Электрический ток! Опасно для жизни!**
Только специалисты или проинструктированные лица могут выполнять следующие операции.

(cs) **Nebezpečí úrazu elektrickým proudem!**
Níže uvedené práce smějí provádět pouze osoby s elektrotechnickým vzděláním.

(et) **Eluohtlik! Elektrilöögioht!**
Järgnevalt kirjeldatud töid tohib teostada ainult elektriala spetsialist või elektrotehnilise instrueerimise läbinud personal.

(hu) **Életveszély az elektromos áram révén!**
Csak elektromos szakemberek és elektrotechnikában képzett személyek végezhetik el a következőkben leírt munkákat.

(lv) **Elektriskā strāva apdraud dzīvību!**
Tālāk aprakstītos darbus drīkst veikt tikai elektrospeciālisti un darbam ar elektrotehniskām iekārtām instruētās personas!

(it) **Pavojus gyvybei dėl elektros srovės!**
Tik elektrikai ir elektrotechnikos specialistai gali atlikti žemiau aprašytus darbus.

(nl) **Levensgevaar door elektrische stroom!**
Uitsluitelijk deskundigen in elektriciteit en elektrotechnisch geinstrueerde personen is het toegestaan, de navolgend beschrevene werkzaamheden uit te voeren.

(da) **Livsfare på grund af elektrisk strøm!**
Kun uddannede el-installatører og personer der e instruerede i elektrotekniske arbejdsopgaver, må udføre de nedenfor anførte arbejder.

(el) **Προσοχή, κίνδυνος ηλεκτροπληξίας!**
Οι εργασίες που αναφέρονται στη συνέχεια θα πρέπει να εκτελούνται μόνο από ηλεκτρολόγους και ηλεκτροτεχνίτες.

(pt) **Perigo de vida devido a corrente eléctrica!**
Apenas electricistas e pessoas com formação electrotécnica podem executar os trabalhos que aseguir se descrevem.

(sv) **Livsfara genom elektrisk ström!**
Endast utbildade elektriker och personer som undervisats i elektroteknik får utföra de arbeten som beskrivs nedan.

(fi) **Hengenvaarallinen jännite!**
Vain pätevät sähköasentajat ja opastusta saaneet henkilöt saavat suorittaa seuraavat työt.

(pl) **Porażenie prądem elektrycznym stanowi zagrożenie dla życia!**
Opisane poniżej prace mogą przeprowadzać tylko wykwalifikowani elektrycy oraz osoby odpowiednio poinstruowane w zakresie elektrotechniki.

(sl) **Življenjska nevarnost zaradi električnega toka!**
Spodaj opisana dela smejo izvajati samo elektrostrokovnjaki in elektrotehnično poučene osebe.

(sk) **Nebezpečenstvo ohrozenia života elektrickým prúdom!**
Práce, ktoré sú nižšie opísané, smú vykonávať iba elektroodborníci a osoby s elektrotechnickým vzdelaním.

(bg) **Опасност за живота от електрически ток!**
Операциите, описани в следващите раздели, могат да се извършват само от специалисти-електротехници и инструктиран електротехнически персонал.

(ro) **Atenţie! Pericol electric!**
Toate lucrările descrise trebuie efectuate numai de personal de specialitate calificat și de persoane cu cunoștiinţe profunde în electrotehnică.

EATON
Powering Business Worldwide

C445UM...

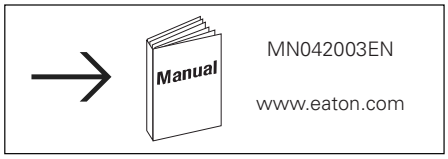

C445UM... Dimensions and Cable Connection

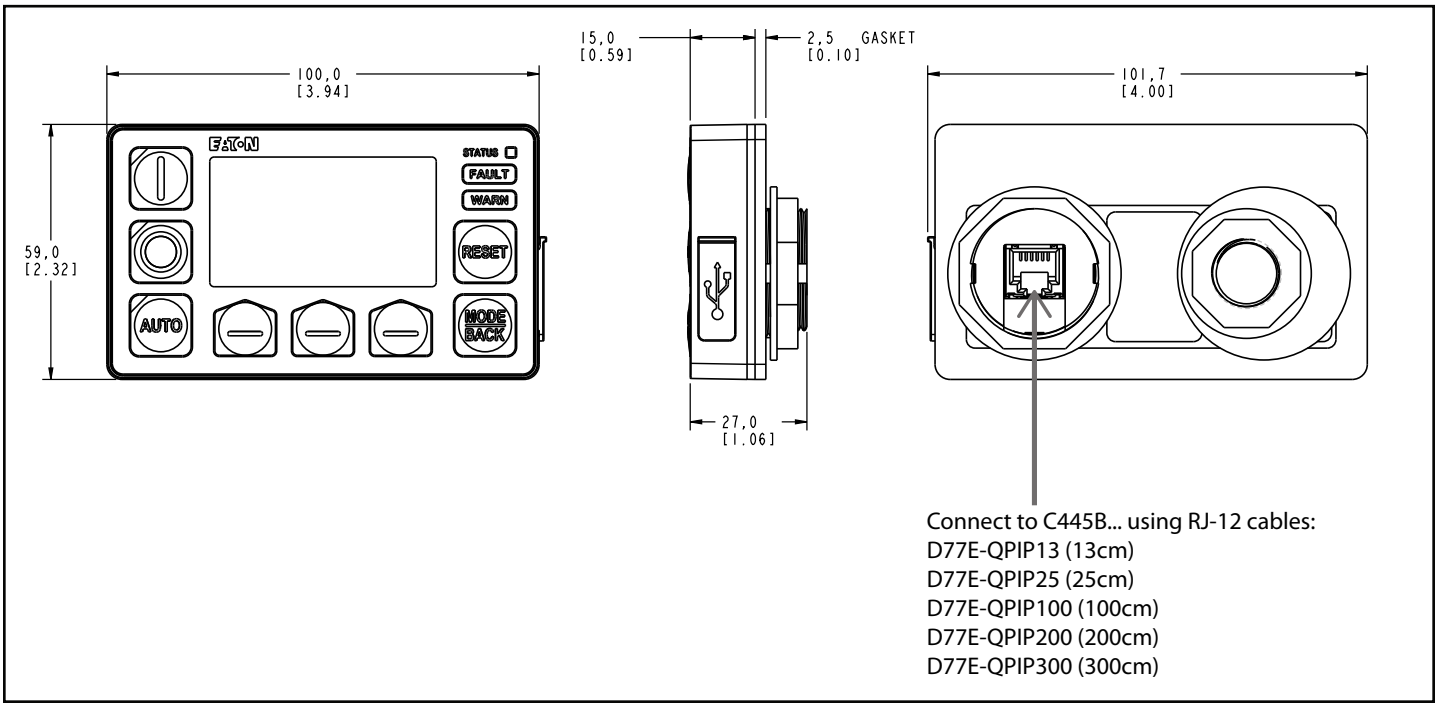

C445UM Mounting

C445UM mounts easily using two 30mm pilot device knockouts. The adapter piece allows two separate center to center distances shown below. Add two jam nuts provided and tighten using a pilot device tool (E22CW recommended).

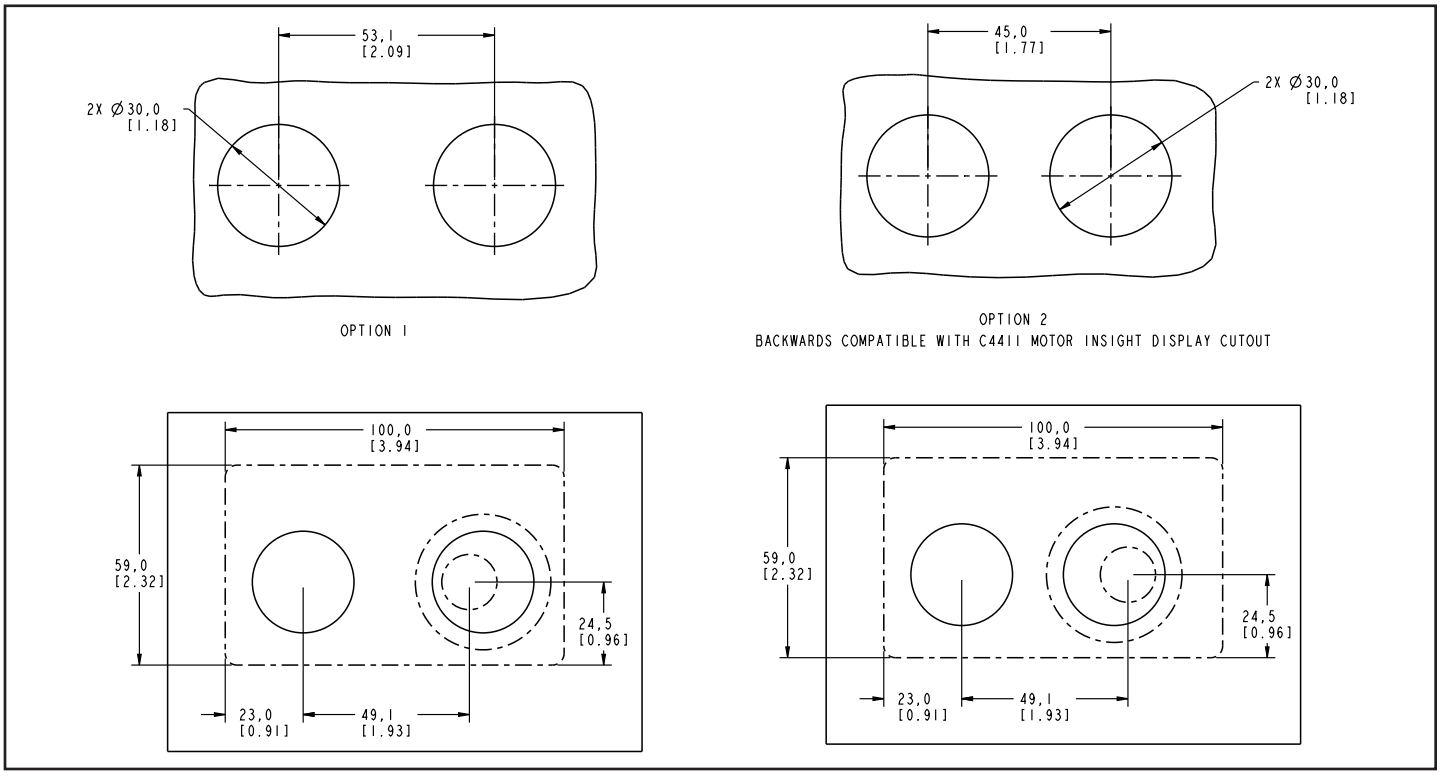

Panel Mounting

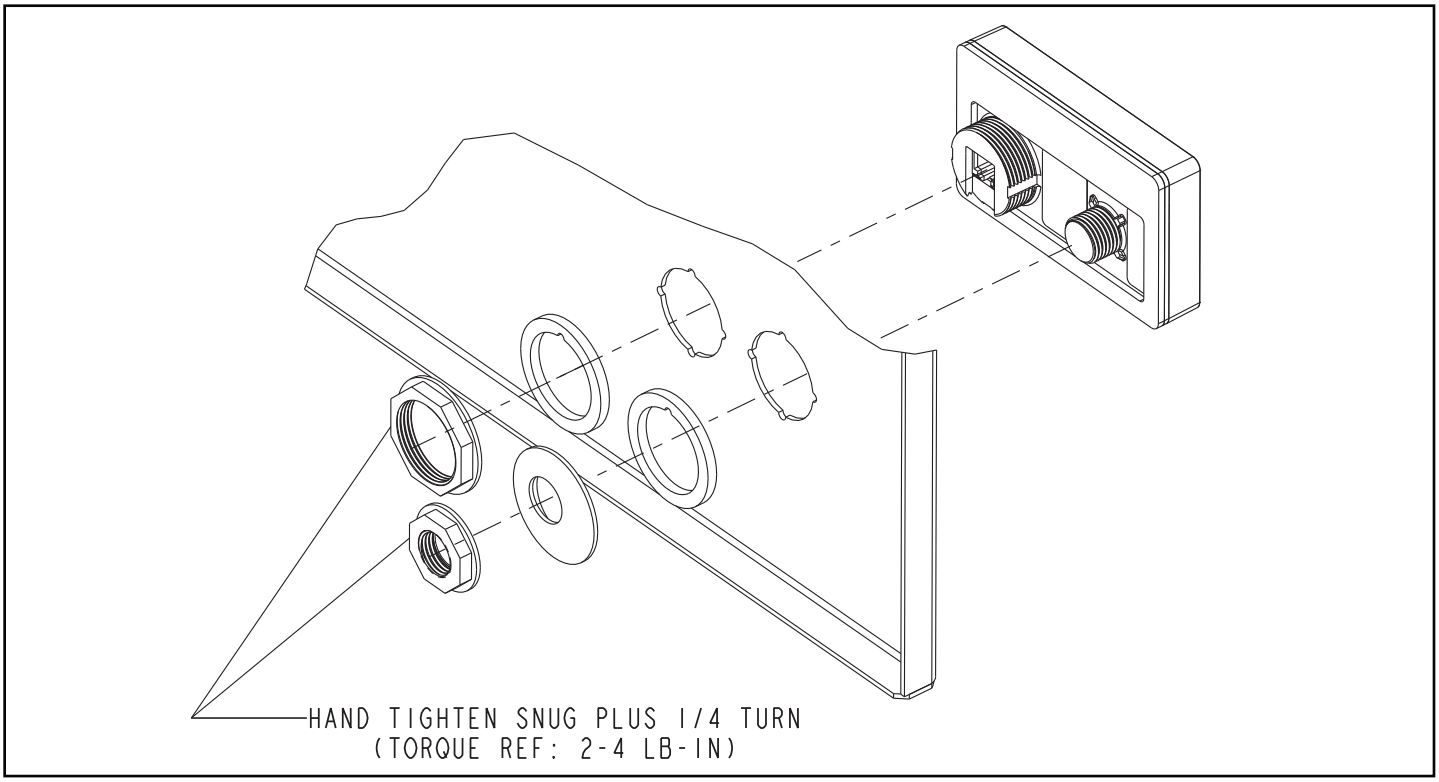

Disclaimer of Warranties and Limitation of Liability

The information, recommendations, descriptions, and safety notations in this document are based on Eaton experience and judgment, and may not cover all contingencies. If further information is required, an Eaton sales office should be consulted.

Sale of the product shown in this literature is subject to the terms and conditions outlined in appropriate Eaton selling policies or other contractual agreement between Eaton and the purchaser.

THERE ARE NO UNDERSTANDINGS, AGREEMENTS, WARRANTIES, EXPRESSED OR IMPLIED, INCLUDING WARRANTIES OF FITNESS FOR A PARTICULAR PURPOSE OR MERCHANTABILITY, OTHER THAN THOSE SPECIFICALLY SET OUT IN ANY EXISTING CONTRACT BETWEEN THE PARTIES. ANY SUCH CONTRACT STATES THE ENTIRE OBLIGATION OF EATON. THE CONTENTS OF THIS DOCUMENT SHALL NOT BECOME PART OF OR MODIFY ANY CONTRACT BETWEEN THE PARTIES.

In no event will Eaton be responsible to the purchaser or user in contract, in tort (including negligence), strict liability, or otherwise for any special, indirect, incidental, or consequential damage or loss whatsoever, including but not limited to damage or loss of use of equipment, plant or power system, cost of capital, loss of power, additional expenses in the use of existing power facilities, or claims against the purchaser or user by its customers resulting from the use of the information, recommendations, and descriptions contained herein.

The information contained in this manual is subject to change without notice.

Eaton
1000 Eaton Boulevard
Cleveland, OH 44122
United States
Eaton.com

© 2016 Eaton
All Rights Reserved
Publication No. IL042004EN
December 2016

Eaton is a registered trademark.

All other trademarks are property
of their respective owners.

Powering Business Worldwide