ITEM NO.	DESCRIPTION	QTY.
1	SCREW MOUNT ADAPTER	6
2	DUST CAP	24
3	MOUNTING SCREW	12

CATALOG NUMBER	SPLIT SLEEVE	ADAPTER COLOR
FASCDSS6R	ZIRCONIA	RED
FASCDSS6OR	ZIRCONIA	ORANGE
FASCDSS6GN	ZIRCONIA	GREEN
FASCDSS6Y	ZIRCONIA	YELLOW
FASCDSS6B	ZIRCONIA	BLUE
FASCDSS6BK	ZIRCONIA	BLACK
FASCDSS6BE	ZIRCONIA	BEIGE
FASCDSS6AQ	ZIRCONIA	AQUA

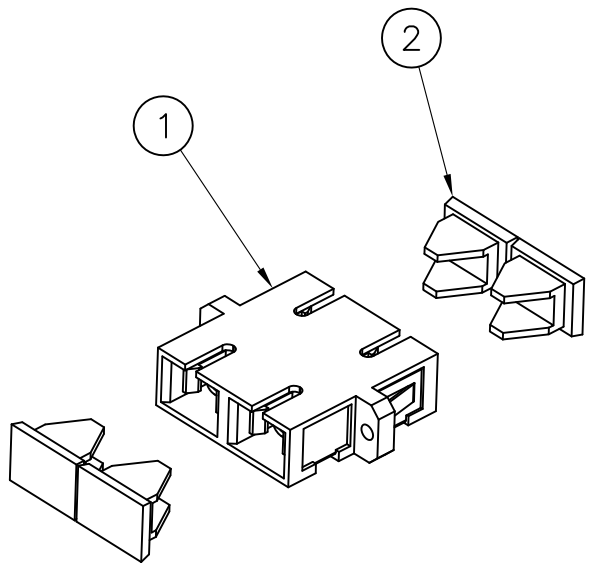

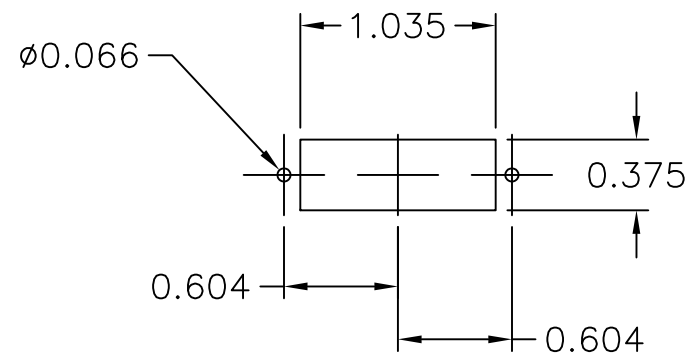

RECOMMENDED PANEL CUTOUT

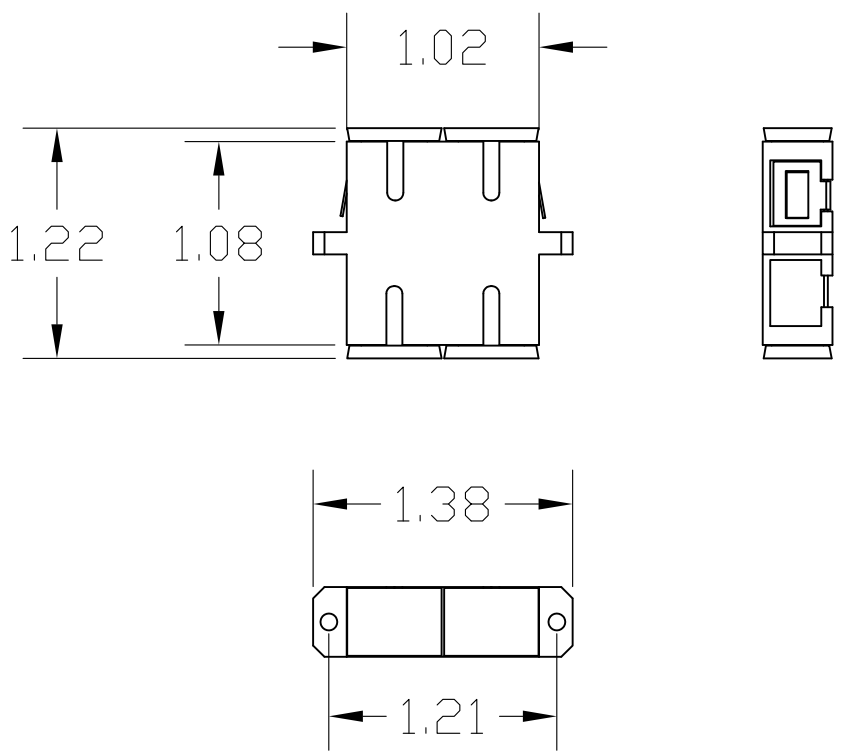

NOTES:

1. ADAPTERS SUPPLIED WITH (2) SCREWS AND DUST CAPS INSTALLED.
2. ADAPTER MATERIAL IS UL–V0 ENGINEERING THERMOPLASTIC.
3. CLIP MATERIAL IS STAINLESS STEEL.
4. ALIGNMENT SLEEVE MATERIAL IS ZIRCONIA– COMPATIBLE WITH BOTH SINGLMODE AND MULTIMODE FIBER.
5. SPECIFICATIONS SUBJECT TO CHANGE WITHOUT NOTICE.

REV.	ECN	DATE	DESCRIPTION	CHG BY	APPD BY
2	17148	10/7/11	ADDED NEW CATALOGS/COLORS	CG	

Created on AUTOCAD

DIMENSIONING AND TOLERANCE PER ANSI Y14.5M–1982
UNLESS OTHERWISE SPECIFIED, DIMENSIONS ARE IN INCHES (MM).
TOLERANCES
.XX = ±.01 (.25)
.XXX = ±.005 (.127)
.XXXX = ±.0025 (.0635)
ANGLE TOL ±1°

IN ACCEPTING OUR DRAWINGS, BLUEPRINTS, OR SUPPORTING DOCUMENTATION FOR QUOTATION OR OTHER PURPOSES, YOU AGREE NOT TO DISCLOSE TO OTHERS THE IDEAS, INFORMATION, OR DESIGNS SHOWN HEREIN, AND THAT YOU WILL MAKE NO USE OF SAME WITHOUT PERMISSION

PROJECT REFERENCE: 021–11
MATERIAL: SEE NOTES
DRAWN BY: C. GRIBBLE 4/20/11
CHECKED BY:
APPROVED BY:

Hubbell Premise Wiring
HUBBELL INCORPORATED (Delaware)
14 Lord's Hill Road, Stonington, Connecticut 06378

TITLE: ADAPTER, SC DUPLEX, SCREW MOUNT

SIZE B | DRAWING NO. HWS12943C | REV. 2
SCALE: 1/1 | SHEET 1 OF 1