8310-R

Color: Red

UPC Code: 07847713324

NEMA: 5-20R

8310-R

Brand Features

All Leviton Hospital Grade Receptacles undergo the most stringent UL testing to assure continuous, safe operation in any application requiring high-abuse tolerance, including health care facilities, manufacturing plants and schools.

Item Description

20 Amp, 125 Volt, NEMA 5-20R, 2P, 3W, Extra Heavy Duty Hospital Grade, Single Receptacle, Straight Blade, Self Grounding, Back &Side Wired, Steel Strap - RED

Technical Information

AC Horsepower Ratings

Horsepower Rating: 1 HP

Electrical Specifications

Dielectric Voltage: Withstands 2000V per UL498

Grounding: Self-Grounding

Temperature Rise: Max 30C after 250 cycles OL at 200 percent rated current

Voltage: 125 Volt

Amperage: 20 Amp

Current Limiting: Full Rated Current

Wire: 3

Pole: 2

Environmental Specifications

Operating Temperature: -40C to 60C

Flammability: Rated V-2 per UL94

Material Specifications

Strap Material: Zinc-Plated Steel

Body Material: Nylon

Face Material: Nylon

Ground Clips: Brass

Terminal Screws: Plated Brass

Color: Red

Line Contacts: Phosphor Bronze

Clamp Nuts: Zinc-Plated Steel

Grounding Screw: Plated Steel

Mechanical Specifications

Product ID: Markings are permanently marked on device

Terminal ID: Brass-Hot, Green-Ground, Silver-Neutral

Terminal Accom.: 14-10 AWG

Torque Range: 14-16 inch pounds

Product Features

Color: Red

Grade: Hospital

NEMA: 5-20R

Standards and Certifications

UL498HG: File E13399

Warranty: 10-Year Limited

CSA C22.2 No. 42: File 152105

UL Fed Spec WC-596: File E13399

ANSI: C-73

NOM: 057

RoHS: Non-Compliant

NEMA: WD-6

Dimensional Diagram

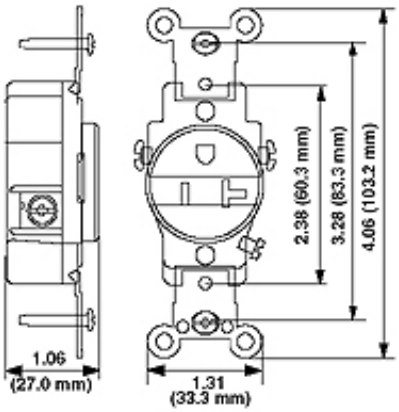

Wiring Diagram

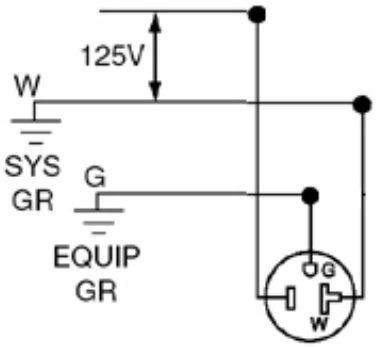

5-20R

SPECIFICATION SUBMITTAL

JOB NAME:	CATALOG NUMBERS:	
JOB NUMBER:		

Leviton Manufacturing Co., Inc.
201 North Service Road, Melville, NY 11747
Teléfono: +1-800-323-8920 · FAX: +1-800-832-9538 · Tech Line (8:30AM-7:30PM E.S.T. Monday-Friday): +1-800-824-3005

Leviton Manufacturing of Canada, Ltd.
165 Hymus Boulevard, Pointe Claire, Quebec H9R 1E9 · Telephone: +1-800-469-7890 · FAX: +1-800-824-3005 · www.leviton.com/canada

Leviton S. de R.L. de C.V.
Lago Tana 43, Mexico DF, Mexico CP 11290 · Tel.: (+52)55-5082-1040 · FAX: (+52)5386-1797 · www.leviton.com.mx

Visit our Website at: www.leviton.com
© 2012 Leviton Manufacturing Co., Inc. Todos los derechos reservados. Subject to change without notice.

Leviton has a global presence.
If you would like to know where your local Leviton office is located please go to:
www.leviton.com/international/contacts/