MALE END VIEW	FEMALE END VIEW
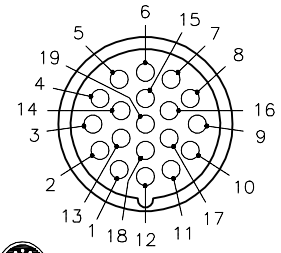	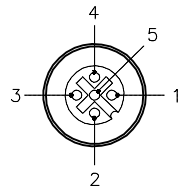
M23 connector (P1)	euro fast. (J1–J4)

SPECIFICATIONS

HOUSING MATERIAL/COLOR	NYLON/BLACK
RECEPTACLE MATERIAL/PLATING	BRASS/NICKEL
CONTACT CARRIER MATERIAL	NYLON
CONTACT MATERIAL/PLATING	BRASS/GOLD
O–RING MATERIAL	VITON
OPERATING VOLTAGE [V]	60 VDC
OPERATING CURRENT [A]	2.0 AMPS/SIGNAL, 9.0 AMPS TOTAL
PROTECTION CLASS	IP67,IP69K: ONLY WHEN ALL RECEPTACLES ARE COVERED WITH PLUGS OR CONNECTED
OPERATING TEMPERATURE	–40˚C to +85˚C (–40˚F to +185˚F)

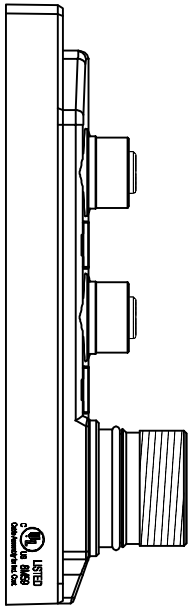

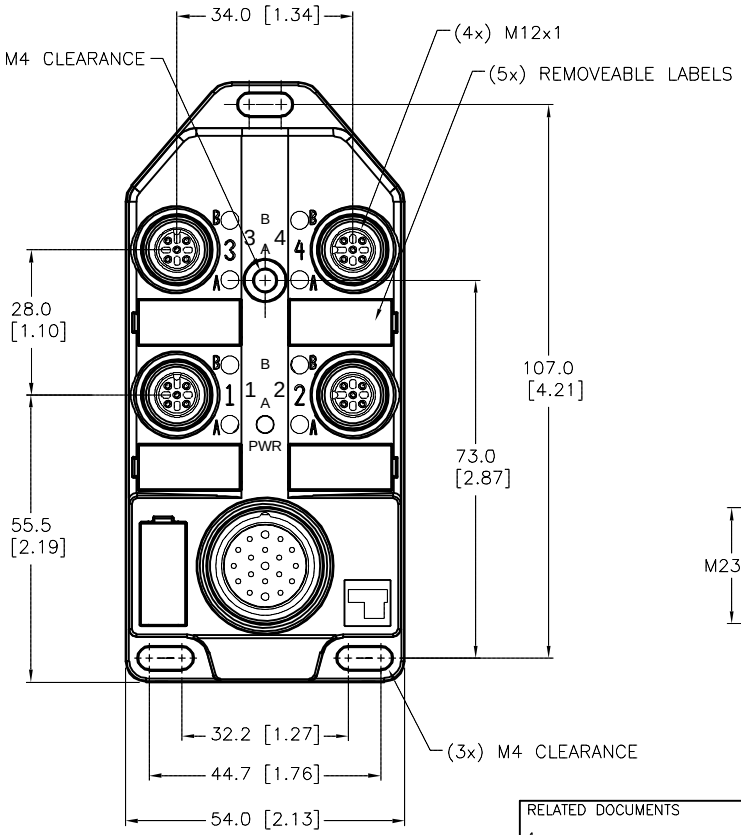

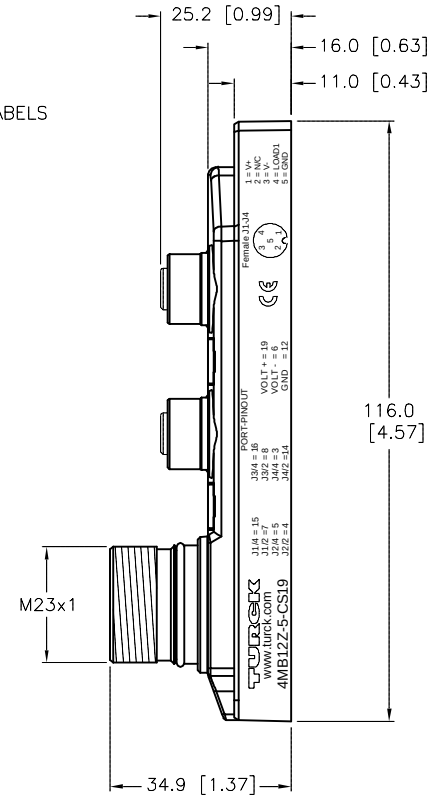

WIRING DIAGRAM

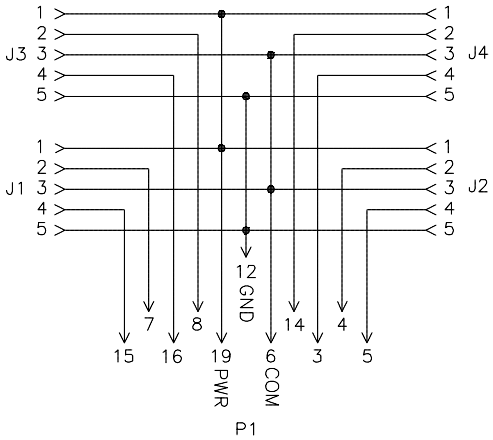

SOURCE DRAWING - FOR REFERENCE ONLY

REV	DESCRIPTION	BY	DATE	ECO NO.
G	ADD CE SYMBOL	NF	08/31/18	66305

RELATED DOCUMENTS
1.
2.
3.
4.

3RD ANGLE PROJECTION

THIS DRAWING IS CONFIDENTIAL AND THE PROPERTY OF TURCK INC. USE OF THIS DOCUMENT WITHOUT WRITTEN PERMISSION IS PROHIBITED.

TURCK

3000 CAMPUS DRIVE
MINNEAPOLIS, MN 55441
1–800–544–7769
(763) 553–7300
(763) 553–0708 fax
www.turck.us

MATERIAL: SEE SPECIFICATIONS

FINISH: SEE SPECIFICATIONS

ALL DIMENSIONS DISPLAYED ON THIS DRAWING ARE FOR REFERENCE ONLY

CONTACT TURCK FOR MORE INFORMATION

DRFT: RDS | DATE: 11/24/04
APVD: SWC | SCALE: 1=1.5

UNIT OF MEASUREMENT
MILLIMETER [INCH]
DO NOT SCALE THIS DRAWING

DESCRIPTION: 4MB12Z–5–CS19

IDENTIFICATION NO.: E8028574 | REV: G

FILE: E8028574 | SHEET 1 OF 1

Approved 08/31/2018, work order #172688 by T.V.