nVent | HOFFMAN

FREE-STAND, TYPE 12, SINGLE OR DUAL ACCESS

INDUSTRY STANDARDS

UL 508A Listed; Type 12; File No. E61997
cUL Listed per CSA C22.2 No. 94; Type 12; File No. E61997

NEMA/EEMAC Type 12
E.I.A. RS310D
CSA, File No. 42186, Type 12
IEC 60529, IP55

Applicable industry standards only for enclosures with Seismic Accessories:
NEBS- Telcordia GR-63-CORE Zone 4, tested with 1000lbs evenly distributed
OSHPD Pre-Approval OPM-0247-13

APPLICATION

Available with front or front and rear access, these Type 12 enclosures have sturdy unibody construction and flexible internal mounting options.

SPECIFICATIONS

- 12 gauge steel
- Seams continuously welded and ground smooth; no holes or knockouts
- Stiffeners on back of two-door enclosures maintain flatness and increase rigidity
- Lifting eyes for easy handling
- 3-point latches operated by oil-tight key-locking handle
- Concealed, easy-to-remove hinges
- Data pockets are high-impact thermoplastic
- Internal mounting channels welded horizontally to sides at top, bottom and center
- Optional panels and rack mount angles can be mounted anywhere along channels
- Oil-resistant door gasket
- Bonding provision on door
- Provision for mounting fluorescent light

To meet GR-63-CORE Zone 4 seismic standards, Free-Stand enclosures must include the following accessories (purchased separately):

For Seismic Free-Stand with Panel
- Seismic Mounting Plate Kit
- Seismic Panel Mounting Kit
- Panel, Full-Length

For Seismic Free-Stand with Rack Angles
- Seismic Mounting Plate Kit
- Rack Mounting Angles - L-Style (Type RP), Full

FINISH

Two finishes available: ANSI 61 gray, polyester powder paint outside and inside; or ANSI 61 gray outside and white, polyester powder paint inside. Optional panels available with a white or conductive finish.

ACCESSORIES

Panels, page 1446
Rack Mounting Angle Kit - L Style, page 1418
PANELITE Enclosure Lights, page 1393
Floor Stand Kit, page 1404
SPECTRACOOL Indoor/Outdoor, page 950
Seismic Mounting Plate Kits, page 1445
Seismic Panel Mounting Kits, page 1445
HF Side-Mount Filter Fans, page 1168
Steel, Stainless Steel and Non-Metallic Window Kits, page 1346
Electric Heaters, page 1236
HOL-SEALERS Hole Seals, page 1374

NOTES

Please visit our Cooling Selection Tool at **nVent.com/HOFFMAN** to explore cooling products for your application.

MODIFICATION AND CUSTOMIZATION

Hoffman excels at modifying and customizing products to your specifications. Contact your local Hoffman sales office or distributor for complete information.

BULLETIN: A30

Standard Product **One-Door Single-Access**

Catalog Number	AxBxC in.	AxBxC mm	Interior Finish	F (in.)	F (mm)	G (in.)	G (mm)	Number of Lifting Eyes	Number of Rack Units
A602418FSG	60.06 x 24.06 x 18.06	1526 x 611 x 459	Gray	32.03	814	23.12	587	2	28
A602418FS	60.06 x 24.06 x 18.06	1526 x 611 x 459	White	32.03	814	23.12	587	2	28
A722418FSG	72.06 x 24.06 x 18.06	1830 x 611 x 459	Gray	38.03	966	29.12	740	2	35
A722418FS	72.06 x 24.06 x 18.06	1830 x 611 x 459	White	38.03	966	29.12	740	2	35
A723018FSG	72.06 x 30.06 x 18.06	1830 x 764 x 459	Gray	38.03	966	29.12	740	2	35
A723018FS	72.06 x 30.06 x 18.06	1830 x 764 x 459	White	38.03	966	29.12	740	2	35
A723618FSG	72.06 x 36.06 x 18.06	1830 x 916 x 459	Gray	38.03	966	29.12	740	2	35
A723618FS	72.06 x 36.06 x 18.06	1830 x 916 x 459	White	38.03	966	29.12	740	2	35
A902420FSG	90.06 x 24.06 x 20.06	2288 x 611 x 510	Gray	47.03	1195	38.12	968	2	45
A902420FS	90.06 x 24.06 x 20.06	2288 x 611 x 510	White	47.03	1195	38.12	968	2	45
A903620FSG	90.06 x 36.06 x 20.06	2288 x 916 x 510	Gray	47.03	1195	38.12	968	2	45
A903620FS	90.06 x 36.06 x 20.06	2288 x 916 x 510	White	47.03	1195	38.12	968	2	45
A603624FSG	60.06 x 36.06 x 24.06	1526 x 916 x 611	Gray	32.03	814	23.12	587	2	28
A603624FS	60.06 x 36.06 x 24.06	1526 x 916 x 611	White	32.03	814	23.12	587	2	28
A722424FSG	72.06 x 24.06 x 24.06	1830 x 611 x 611	Gray	38.03	966	29.12	740	2	35
A722424FS	72.06 x 24.06 x 24.06	1830 x 611 x 611	White	38.03	966	29.12	740	2	35
A723024FSG	72.06 x 30.06 x 24.06	1830 x 764 x 611	Gray	38.03	966	29.12	740	2	35
A723024FS	72.06 x 30.06 x 24.06	1830 x 764 x 611	White	38.03	966	29.12	740	2	35
A723624FSG	72.06 x 36.06 x 24.06	1830 x 916 x 611	Gray	38.03	966	29.12	740	2	35
A723624FS	72.06 x 36.06 x 24.06	1830 x 916 x 611	White	38.03	966	29.12	740	2	35
A903624FSG	90.06 x 36.06 x 24.06	2288 x 916 x 611	Gray	47.03	1195	38.12	968	2	45
A903624FS	90.06 x 36.06 x 24.06	2288 x 916 x 611	White	47.03	1195	38.12	968	2	45
A723630FSG	72.06 x 36.06 x 30.06	1830 x 916 x 764	Gray	38.03	966	29.12	740	4	35
A723630FS	72.06 x 36.06 x 30.06	1830 x 916 x 764	White	38.03	966	29.12	740	4	35
A723636FSG	72.06 x 36.06 x 36.06	1830 x 916 x 916	Gray	38.03	966	29.12	740	4	35
A723636FS	72.06 x 36.06 x 36.06	1830 x 916 x 916	White	38.03	966	29.12	740	4	35
A903636FSG	90.06 x 36.06 x 36.06	2288 x 916 x 916	Gray	47.03	1195	38.12	968	4	45
A903636FS	90.06 x 36.06 x 36.06	2288 x 916 x 916	White	47.03	1195	38.12	968	4	45

Four lifting eyes are furnished if C = 30.06 (764mm) or more.

Removable 12.00 x 12.00 (305mm x 305mm) data pocket included.

Seismic accessories are available for one-door enclosures.

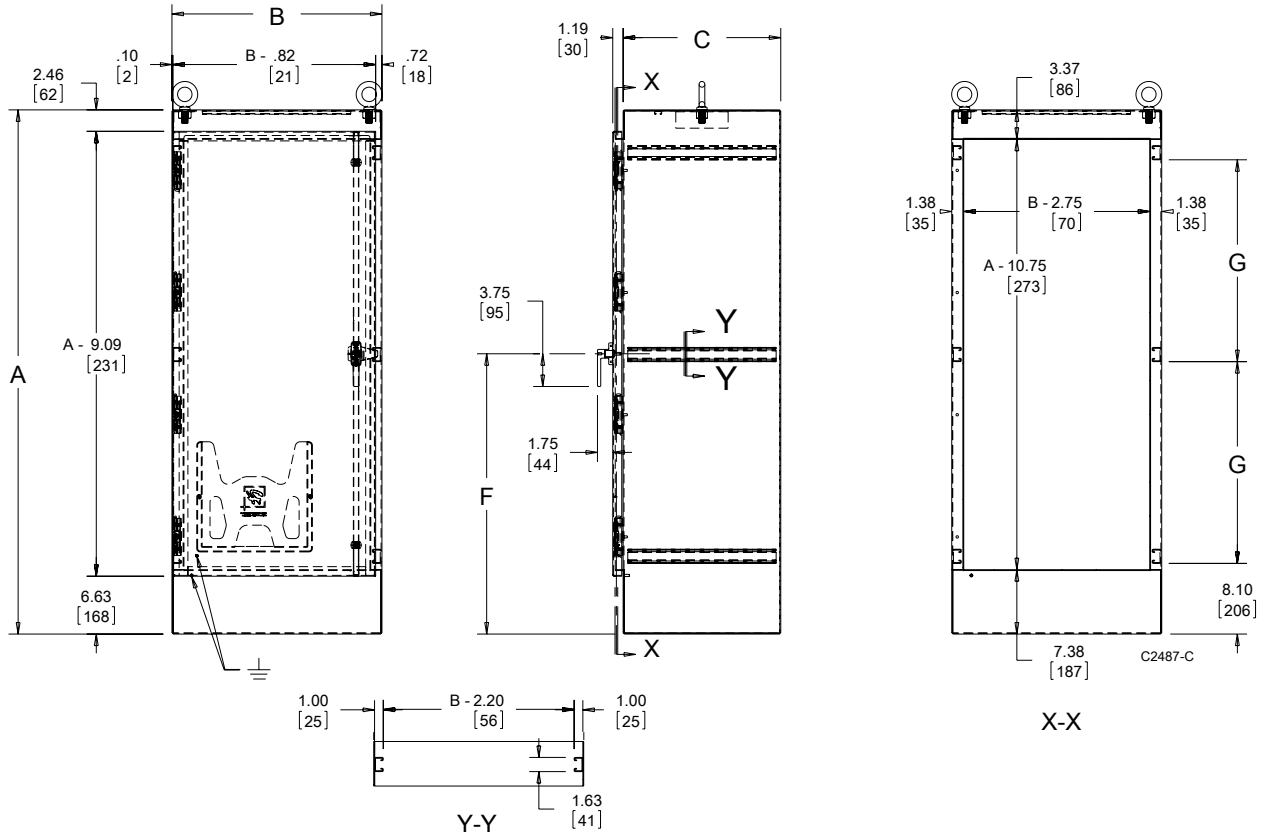

nVent | HOFFMAN

FREE-STAND TYPE 12 ENCLOSURE ACCESSORY SELECTION GUIDE

FREE-STAND TYPE 12 ONE-DOOR

(See Accessories for Details)

PANELS

Catalog Number

Steel	Conductive	Description	Panel Size	A60Z418FS	A72Z418FS	A72Z018FS	A72Z618FS	A90Z420FS	A90Z620FS	A60Z624FS	A72Z424FS	A72Z024FS	A72Z624FS	A90Z624FS	A72Z630FS	A72Z636FS	A90Z636FS	A72Z424FSDA	A72Z024FSDA	A72Z624FSDA	A90Z624FSDA	A72Z430FSDA	A72Z436FSDA	A72Z636FSDA	A90Z636FSDA
				One-Door Single-Access Enclosures														One-Door Dual Access Enclosures							
A60P24F1	A60P24F1G	Full Panel	48.00 x 20.00 (1219 x 508)	•	•[a]			•[a]			•[a]							•[a]				•[a]	•[a]		
A60P24F2	A60P24F2G	Half Panel	24.88 x 20.00 (632 x 508)	•	•[a]			•[a]			•[a]							•[a]				•[a]	•[a]		
A72P24F1	A72P24F1G	Full Panel	60.00 x 20.00 (1524 x 508)		•			•[a]			•							•				•	•		
A72P24F2	A72P24F2G	Half Panel	30.88 x 20.00 (784 x 508)	•[a]	•			•[a]			•							•				•	•		
A90P24F1	A90P24F1G	Full Panel	78.00 x 20.00 (1981 x 508)					•																	
A90P24F2	A90P24F2G	Half Panel	39.00 x 20.00 (1013 x 508)	•[a]	•[a]			•			•[a]							•[a]				•[a]	•[a]		
A72P30F1	A72P30F1G	Full Panel	60.00 x 26.00 (1524 x 660)			•						•							•						
A72P30F2	A72P30F2G	Half Panel	30.88 x 26.00 (784 x 660)			•						•							•						
A60P36F1	A60P36F1G	Full Panel	48.00 x 32.00 (1219 x 813)				•[a]		•[a]	•			•[a]	•[a]	•[a]	•[a]	•[a]			•[a]	•[a]			•[a]	
A60P36F2	A60P36F2G	Half Panel	24.88 x 32.00 (632 x 813)				•[a]		•[a]	•			•[a]	•[a]	•[a]	•[a]	•[a]			•[a]	•[a]			•[a]	
A72P36F1	A72P36F1G	Full Panel	60.00 x 32.00 (1524 x 813)				•						•	•[a]	•	•	•[a]			•	•[a]			•	
A72P36F2	A72P36F2G	Half Panel	30.88 x 32.00 (784 x 813)				•	•[a]	•[a]	•[a]			•	•[a]	•	•	•[a]			•	•[a]			•	
A90P36F1	A90P36F1G	Full Panel	78.00 x 32.00 (1981 x 813)						•					•			•				•				•
A90P36F2	A90P36F2G	Half Panel	39.88 x 32.00 (1013 x 813)				•[a]		•	•[a]			•[a]	•	•[a]	•[a]	•			•[a]	•			•[a]	•

SWING-OUT PANELS

Catalog No.	Description	Panel Size	A60Z418FS	A72Z418FS	A72Z018FS	A72Z618FS	A90Z420FS	A90Z620FS	A60Z624FS	A72Z424FS	A72Z024FS	A72Z624FS	A90Z624FS	A72Z630FS	A72Z636FS	A90Z636FS	A72Z424FSDA	A72Z024FSDA	A72Z624FSDA	A90Z624FSDA	A72Z430FSDA	A72Z436FSDA	A72Z636FSDA	A90Z636FSDA
A72SP24F3	Full Panel	60.00 x 18.81 (1524 x 478)		•						•							•				•	•		
A72SP24F4	Half Panel[b]	30.88 x 18.81 (784 x 478)		•						•							•				•	•		
A72AP30F3	Full Panel	60.00 x 24.81 (1524 x 630)			•						•							•						
A72AP30F4	Half Panel[b]	30.88 x 24.81 (784 x 630)			•						•							•						
A72SP36F3	Full Panel	60.00 x 30.81 (1524 x 783)				•						•		•	•				•				•	
A72SP36F4	Half Panel[b]	30.88 x 30.81 (784 x 783)				•						•		•	•				•				•	
A90SP36F3	Full Panel	78.00 x 30.81 (1981 x 783)						•					•			•				•				•
A90SP36F4	Half Panel[b]	39.88 x 30.81 (1013 x 783)						•					•			•				•				•

SIDE-MOUNT PANELS

Steel	Conductive	Description	Panel Size	A60Z418FS	A72Z418FS	A72Z018FS	A72Z618FS	A90Z420FS	A90Z620FS	A60Z624FS	A72Z424FS	A72Z024FS	A72Z624FS	A90Z624FS	A72Z630FS	A72Z636FS	A90Z636FS	A72Z424FSDA	A72Z024FSDA	A72Z624FSDA	A90Z624FSDA	A72Z430FSDA	A72Z436FSDA	A72Z636FSDA	A90Z636FSDA
A60SMP14	A60SMP14G	14 Wide Panel (356)	48.00 x 14.00 (1219 x 356)	•						•															
A72SMP14	A72SMP14G	14 Wide Panel (356)	60.00 x 14.00 (1524 x 356)		•	•	•				•	•	•		•	•		•	•	•		•	•	•	
A90SMP14	A90SMP14G	14 Wide Panel (356)	78.00 x 14.00 (1981 x 356)					•	•					•			•				•				•
A72SMP20	A72SMP20G	20 Wide Panel (508)	60.00 x 20.00 (1524 x 508)								•	•	•		•	•		•	•	•		•	•	•	
A90SMP20	A90SMP20G	20 Wide Panel (508)	78.00 x 20.00 (1981 x 508)											•			•				•				•

HEAVY-DUTY PANEL SUPPORTS

Catalog No.	Description	Panel Size	A60Z418FS	A72Z418FS	A72Z018FS	A72Z618FS	A90Z420FS	A90Z620FS	A60Z624FS	A72Z424FS	A72Z024FS	A72Z624FS	A90Z624FS	A72Z630FS	A72Z636FS	A90Z636FS	A72Z424FSDA	A72Z024FSDA	A72Z624FSDA	A90Z624FSDA	A72Z430FSDA	A72Z436FSDA	A72Z636FSDA	A90Z636FSDA
A60FSHDPS	2 Full-Length Panel Supports	57.25 (1454)	•						•[a]															
A72FSHDPS	2 Full-Length Panel Supports	69.25 (1759)		•	•	•				•	•	•		•	•		•	•	•		•	•	•	
A90FSHDPS	2 Full-Length Panel Supports	87.25 (2216)					•	•					•			•				•				•

Millimeter dimensions are in parentheses ( )
[a] Requires heavy-duty panel supports
[b] Fits in top half or bottom half of enclosure

FREE-STAND TYPE 12 ONE-DOOR

(See Accessories for Details)

				One-Door Single-Access Enclosures														One-Door Dual Access Enclosures							
PANELS Catalog Number				A60241 8FS	A72241 8FS	A72301 8FS	A72361 8FS	A90242 0FS	A90362 0FS	A60362 4FS	A72242 4FS	A72302 4FS	A72362 4FS	A90362 4FS	A72363 0FS	A72363 6FS	A90363 6FS	A72242 4FSDA	A72302 4FSDA	A72362 4FSDA	A90362 4FSDA	A72243 0FSDA	A72243 6FSDA	A72363 6FSDA	A90363 6FSDA
Steel	Conductive	Description	Panel Size																						
A60P48F1	A60P48F1G	Full Panel	48.00 x 44.00 (1219 x 1118)																						
A72P48F1	A72P48F1G	Full Panel	60.00 x 44.00 (1524 x 1118)																						
A72P48F2	A72P48F2G	Half Panel	30.88 x 44.00 (784 x 1118)																						
A90P48F1	A90P48F1G	Full Panel	78.00 x 44.00 (1981 x 1118)																						
A90P48F2	A90P48F2G	Half Panel	39.88 x 44.00 (1013 x 1118)																						
A72P60F1	A72P60F1G	Full Panel	60.00 x 56.00 (1524 x 1422)																						
A72P60F2	A72P60F2G	Half Panel	30.88 x 56.00 (784 x 1422)																						
A72P72F1	A72P72F1G	Full Panel	60.00 x 68.00 (1524 x 1727)																						
A72P72F2	A72P72F2G	Half Panel	30.88 x 68.00 (784 x 1727)																						
A90P72F1	A90P72F1G	Full Panel	78.00 x 68.00 (1981 x 1727)																						
A90P72F2	A90P72F2G	Half Panel	39.88 x 68.00 (1013 x 1727)																						

CENTER PANEL SUPPORTS

Catalog No.	Description																						
A60FSCPS	Center Panel Support																						
A72FSCPS	Center Panel Support																						
A90FSCPS	Center Panel Support																						

CLAMPING NUTS

Catalog No.	Description																						
APS1420CN	1/4-20 Clamping Nut (Qty. 20) for special use	•	•	•	•	•	•	•	•	•	•	•	•	•	•	•	•	•	•	•	•	•	•
APS51616CN	1/4-18 Clamping Nut (Qty. 20) for special use	•	•	•	•	•	•	•	•	•	•	•	•	•	•	•	•	•	•	•	•	•	•

CASTERS

Catalog No.	Description	Size																					
DMCKC	Set of 4 Casters	4 high x 3 diameter	•	•	•	•	•	•	•	•	•	•	•	•	•	•	•	•	•	•	•	•	•

19-IN. RACK PANELS

Catalog No.	Description	Rack Panel Size	Rack Units																				
P19RP1UA	Aluminum Rack Panel	19.00x1.75 (483x44)	1	•	•	•[b]	•[b]	•	•[b]		•	•[b]	•[b]	•[b]	•[b]	•[b]	•[b]	•	•[b]	•[b]	•[b]	•	•	•[b]	•[b]
P19RP2UA	Aluminum Rack Panel	19.00x3.50 (483x89)	2	•	•	•[b]	•[b]	•	•[b]		•	•[b]	•[b]	•[b]	•[b]	•[b]	•[b]	•	•[b]	•[b]	•[b]	•	•	•[b]	•[b]
P19RP3UA	Aluminum Rack Panel	19.00x5.25 (483 x133)	3	•	•	•[b]	•[b]	•	•[b]		•	•[b]	•[b]	•[b]	•[b]	•[b]	•[b]	•	•[b]	•[b]	•[b]	•	•	•[b]	•[b]
P19RP4UA	Aluminum Rack Panel	19.00x7.00 (483x178)	4	•	•	•[b]	•[b]	•	•[b]		•	•[b]	•[b]	•[b]	•[b]	•[b]	•[b]	•	•[b]	•[b]	•[b]	•	•	•[b]	•[b]
P19RP5UA	Aluminum Rack Panel	19.00x8.75 (483x222)	5	•	•	•[b]	•[b]	•	•[b]		•	•[b]	•[b]	•[b]	•[b]	•[b]	•[b]	•	•[b]	•[b]	•[b]	•	•	•[b]	•[b]
P19RP6UA	Aluminum Rack Panel	19.00x10.50 (483x267)	6	•	•	•[b]	•[b]	•	•[b]		•	•[b]	•[b]	•[b]	•[b]	•[b]	•[b]	•	•[b]	•[b]	•[b]	•	•	•[b]	•[b]
P19RP7UA	Aluminum Rack Panel	19.00x12.25 (483x311)	7	•	•	•[b]	•[b]	•	•[b]		•	•[b]	•[b]	•[b]	•[b]	•[b]	•[b]	•	•[b]	•[b]	•[b]	•	•	•[b]	•[b]
P19RP8UA	Aluminum Rack Panel	19.00x14.00 (483x356)	8	•	•	•[b]	•[b]	•	•[b]		•	•[b]	•[b]	•[b]	•[b]	•[b]	•[b]	•	•[b]	•[b]	•[b]	•	•	•[b]	•[b]
P19RP9UA	Aluminum Rack Panel	19.00x15.75 (483x400)	9	•	•	•[b]	•[b]	•	•[b]		•	•[b]	•[b]	•[b]	•[b]	•[b]	•[b]	•	•[b]	•[b]	•[b]	•	•	•[b]	•[b]
P19RP10UA	Aluminum Rack Panel	19.00x17.50 (483x445)	10	•	•	•[b]	•[b]	•	•[b]		•	•[b]	•[b]	•[b]	•[b]	•[b]	•[b]	•	•[b]	•[b]	•[b]	•	•	•[b]	•[b]
P19RP11UA	Aluminum Rack Panel	19.00x19.25 (483x489)	11	•	•	•[b]	•[b]	•	•[b]		•	•[b]	•[b]	•[b]	•[b]	•[b]	•[b]	•	•[b]	•[b]	•[b]	•	•	•[b]	•[b]
P19RP12UA	Aluminum Rack Panel	19.00x21.00 (483x533)	12	•	•	•[b]	•[b]	•	•[b]		•	•[b]	•[b]	•[b]	•[b]	•[b]	•[b]	•	•[b]	•[b]	•[b]	•	•	•[b]	•[b]
P24RP2UA	Aluminum Rack Panel	24.00x3.50 (610x89)	2			•						•							•						
P24RP3UA	Aluminum Rack Panel	24.00x5.25 (610x133)	3			•						•							•						
P24RP4UA	Aluminum Rack Panel	24.00x7.00 (610x178)	4			•						•							•						
P24RP8UA	Aluminum Rack Panel	24.00x14.00 (610x356)	8			•						•							•						

Millimeter dimensions are in parentheses ( )
One rack unit= 1.75 in. (45mm)
[b] Requires swing-out rack mounting frame

FREE-STAND TYPE 12 ONE-DOOR

(See Accessories for Details)

					One-Door Single-Access Enclosures													One-Door Dual Access Enclosures							
					A60418FS	A72418FS	A723018FS	A723618FS	A902420FS	A903620FS	A603624FS	A722424FS	A723024FS	A723624FS	A903624FS	A723630FS	A723636FS	A903636FS	A722424FSDA	A723024FSDA	A723624FSDA	A903624FSDA	A722430FSDA	A722436FSDA	A723636FSDA	A903636FSDA
RACK-MOUNT ANGLES L-STYLE (TYPE RP) FOR 19- AND 24-IN. EQUIPMENT																									
Catalog No.	Description	For Rack Size	No. Units[a]	Angle Length																					
A60RP24F5	2 Full-Length Angles	19 (483)	28	49.00 (1245)	•	•			•			•							•				•	•		
A60RP24F6	2 Half-Length Angles	19 (483)	15	26.25 (677)	•																					
A72RP24F5	2 Full-Length Angles	19 (483)	35	61.25 (1556)		•			•			•							•				•	•		
A72RP24F6	2 Half-Length Angles	19 (483)	18	31.50 (800)	•	•						•							•				•	•		
A90RP24F5	2 Full-Length Angles	19 (483)	45	78.75 (2000)					•																	
A90RP24F6	2 Half-Length Angles	19 (483)	23	40.25 (1022)	•	•			•			•							•				•	•		
A72RP30F5	2 Full-Length Angles	24 (610)	35	61.25 (1556)			•						•							•						
A72RP30F6	2 Half-Length Angles	24 (610)	18	31.50 (800)			•						•							•						
RACK MOUNTING ANGLES U-STYLE (TYPE RA) FOR 19- AND 24-IN. EQUIPMENT																									
Catalog No.	Description	For Rack Size	No. Units[a]	Angle Length																					
A60RA19TH	2 Full-Length Angles	19 (483)	28	49.00 (1245)	•	•			•			•							•				•	•		
A72RA19TH	2 Full-Length Angles	19 (483)	35	61.25 (1556)		•			•			•							•				•	•		
A90RA19TH	2 Full-Length Angles	19 (483)	45	78.75 (2000)					•																	
A72RA24TH	2 Full-Length Angles	24 (610)	35	61.25 (1556)			•						•							•						
CLIP NUT PACKAGE																									
Catalog No.	Description	Size	Fits																						
AN1032	Clip Nut (Pkg. 20)	#10-32 Zinc Plated	RA Type Mnt. Angles		•	•	•		•			•	•						•	•			•	•		
19-IN. SWING-OUT RACK MOUNTING FRAMES																									
Catalog No.	Description	For Rack Size	No. Units[a]	Angle Length																					
A7230S0F19	Full Swing-Out Frame	19 (483)	33	57.88 (1470)			•						•							•						
A7236S0F19	Full Swing-Out Frame	19 (483)	33	57.88 (1470)				•						•		•	•				•				•	
A9036S0F19	Full Swing-Out Frame	19 (483)	43	75.36 (1915)						•					•			•				•				•
RACK-ANGLE MOUNTED DRAWERS*																									
Catalog No.	Description	For Rack Size	Rack Units																						
P19DR1US	Drawer	19.00 (483)	1		•	•			•			•							•				•	•		
P19DR2US	Drawer	19.00 (483)	2		•	•			•			•							•				•	•		
P19DR3US	Drawer	19.00 (483)	3		•	•			•			•							•				•	•		
WRITING SURFACE*																									
Catalog No.	Description	Fits Drawer																							
P12WS	Hinged Surface	P12DR1US, P12DR2US, P19DR3US			•	•			•			•							•				•	•		
RACK-MOUNT SHELVES*																									
Catalog No.	Description	Shelf Size	For Rack Size	Rack Units																					
P19SHP68	Sliding Shelf	16.72X16.20 (425x412)	19.00 (483)	2	•	•			•			•							•				•	•		
P19SHP810	Sliding Shelf	24.59x16.20 (625x412)	19.00 (483)	2	•	•			•			•							•				•	•		
GUIDES FOR RACK-MOUNT EQUIPMENT*																									
Catalog No.	Description	Rack Units																							
AG1U6	Chassis Guides (2)	1			•	•			•			•							•				•	•		

Millimeter dimensions are in parentheses ( )
One rack unit= 1.75 in. (45mm)
[a] Will not fit if other panels are also installed in same enclosure
* Requires Rack Angles